APXVLRRMM15B_43-C-I20

Features

- 10 ports / 5 cross pol systems in high band (1710-2690 MHz)
- Integrated and field replaceable SRET
- ACU HW version: 2.02
- Compliant with AISG v2.0 and 3GPP

PRODUCT OVERVIEW						
	Frequency Range (MHz)	(2x) 1710-2170		(1x) 1710-2690	(2x) 2490-2690	
	Array	B1	B2	Y1	Y2	Y3
	Connector	1-2	3-4	5-6	7-8	9-10
		10 PORTS				
	Polarization	XPOL				
	Azimuth Beamwidth (avg)	65°				
	Electrical Downtilt	2-12°		2-12°	2-12°	
	Dimensions	1500 x 429 x 199 mm (59.1 x 16.9 x 7.8 in)				

ORDERING OPTIONS Select from the following ordering options

ANTENNA MODEL NUMBER	CONFIGURATION	MOUNTING HARDWARE	MOUNTING PIPE DIAMETER	SHIPPING WEIGHT
APXVLRRMM15B_43-C-I20	ACU-I20-B5 Internal RET Included	APM50-B1 Beam Tilt Kit Included	50-110 mm (2.0-4.3 in)	28.3 kg (62.4 lbs)

APXVLRRMM15B_43-C-I20

ELECTRICAL SPECIFICATIONS			Y1				
Frequency Range		MHz	1710-2690				
		MHz	1710-1880	1850-1990	1920-2170	2300-2400	2490-2690
Polarization		---	±45°				
Gain	Over all Tilts	dBi	17.5 ± 0.7	17.9 ± 0.3	18.2 ± 0.5	18.4 ± 0.4	18.9 ± 0.5
	Max Gain	dBi	18.2	18.2	18.7	18.8	19.4
Azimuth Beamwidth (3 dB)		degrees	63.0° ± 6.4°	56.6° ± 4.6°	54.4° ± 3.0°	57.1° ± 2.6°	57.1° ± 3.4°
Elevation Beamwidth (3 dB)		degrees	7.0° ± 0.6°	6.4° ± 0.4°	5.8° ± 0.4°	5.2° ± 0.3°	4.8° ± 0.3°
Electrical Downtilt		degrees	2-12°				
Impedance		Ohms	50Ω				
VSWR (Return Loss)		---	1.5:1 (-14 dB)				
Passive Intermodulation 3rd Order for 2x20 W Carriers		dBc	-150				
Front-to-Back Ratio, Total Power, ± 30°		dB	26.2	26.8	26.2	21.9	24.0
First Upper Side Lobe Suppression		dB	20.6	20.5	17.7	19.0	14.9
Cross Polar Discrimination Over Sector		dB	17.2	15.1	13.0	11.6	10.2
Cross Polar Discrimination (XPD) at Mechanical Boresight (0°)		dB	20.1	23.7	23.2	23.5	23.0
Maximum Effective Power Per Port		Watts	250 W				
Cross Polar Isolation		dB	27				
Interband Isolation		dB	25				

Specifications follow BASTA guidelines.

ELECTRICAL SPECIFICATIONS			Y2
Frequency Range		MHz	2490-2690
Polarization		---	±45°
Gain	Over all Tilts	dBi	17.7 ± 0.7
	Max Gain	dBi	18.4
Azimuth Beamwidth (3 dB)		degrees	61.9° ± 3.9°
Elevation Beamwidth (3 dB)		degrees	4.7° ± 0.2°
Electrical Downtilt		degrees	2-12°
Impedance		Ohms	50Ω
VSWR (Return Loss)		---	1.5:1 (-14 dB)
Passive Intermodulation 3rd Order for 2x20 W Carriers		dBc	-150
Front-to-Back Ratio, Total Power, ± 30°		dB	18.5
First Upper Side Lobe Suppression		dB	20.5
Cross Polar Discrimination Over Sector		dB	8.5
Cross Polar Discrimination (XPD) at Mechanical Boresight (0°)		dB	19.3
Maximum Effective Power Per Port		Watts	250 W
Cross Polar Isolation		dB	27
Interband Isolation		dB	25

Specifications follow BASTA guidelines.

APXVLRRMM15B_43-C-I20

ELECTRICAL SPECIFICATIONS			Y3
Frequency Range		MHz	2490-2690
Polarization		---	±45°
Gain	Over all Tilts	dBi	17.8 ± 0.7
	Max Gain	dBi	18.5
Azimuth Beamwidth (3 dB)		degrees	61.4° ± 4.3°
Elevation Beamwidth (3 dB)		degrees	4.7° ± 0.2°
Electrical Downtilt		degrees	2-12°
Impedance		Ohms	50Ω
VSWR (Return Loss)		---	1.5:1 (-14 dB)
Passive Intermodulation 3rd Order for 2x20 W Carriers		dBc	-150
Front-to-Back Ratio, Total Power, ± 30°		dB	19
First Upper Side Lobe Suppression		dB	19.7
Cross Polar Discrimination Over Sector		dB	9.3
Cross Polar Discrimination (XPD) at Mechanical Boresight (0°)		dB	16.9
Maximum Effective Power Per Port		Watts	250 W
Cross Polar Isolation		dB	27
Interband Isolation		dB	25

Specifications follow BASTA guidelines.

ELECTRICAL SPECIFICATIONS			B1	
Frequency Range		MHz	1710-2170	
		MHz	1710-1880	1920-2170
Polarization		---	±45°	
Gain	Over all Tilts	dBi	16.9 ± 0.4	16.9 ± 0.6
	Max Gain	dBi	17.3	17.5
Azimuth Beamwidth (3 dB)		degrees	66.1° ± 4.6°	64.3° ± 4.6°
Elevation Beamwidth (3 dB)		degrees	6.9° ± 0.4°	5.9° ± 0.6°
Electrical Downtilt		degrees	2-12°	
Impedance		Ohms	50Ω	
VSWR (Return Loss)		---	1.5:1 (-14 dB)	
Passive Intermodulation 3rd Order for 2x20 W Carriers		dBc	-150	
Front-to-Back Ratio, Total Power, ± 30°		dB	23.2	24.1
First Upper Side Lobe Suppression		dB	19.6	17.3
Cross Polar Discrimination Over Sector		dB	16.8	16.1
Cross Polar Discrimination (XPD) at Mechanical Boresight (0°)		dB	26.4	25.5
Maximum Effective Power Per Port		Watts	250 W	
Cross Polar Isolation		dB	27	
Interband Isolation		dB	25	

Specifications follow BASTA guidelines.

APXVLRRMM15B_43-C-I20

ELECTRICAL SPECIFICATIONS			■ B2	
Frequency Range		MHz	1710-2170	
		MHz	1710-1880	1920-2170
Polarization		---	±45°	
Gain	Over all Tilts	dBi	16.8 ± 0.4	17.0 ± 0.6
	Max Gain	dBi	17.2	17.6
Azimuth Beamwidth (3 dB)		degrees	66.5° ± 4.3°	65.1° ± 4.2°
Elevation Beamwidth (3 dB)		degrees	6.9° ± 0.3°	6.0° ± 0.6°
Electrical Downtilt		degrees	2-12°	
Impedance		Ohms	50Ω	
VSWR (Return Loss)		---	1.5:1 (-14 dB)	
Passive Intermodulation 3rd Order for 2x20 W Carriers		dBc	-150	
Front-to-Back Ratio, Total Power, ± 30°		dB	22.8	23.9
First Upper Side Lobe Suppression		dB	18.3	16.5
Cross Polar Discrimination Over Sector		dB	17.1	15.3
Cross Polar Discrimination (XPD) at Mechanical Boresight (0°)		dB	23.1	26.5
Maximum Effective Power Per Port		Watts	250 W	
Cross Polar Isolation		dB	27	
Interband Isolation		dB	25	

Specifications follow BASTA guidelines.

APXVLRRMM15B_43-C-I20

BOTTOM VIEW - LABELING

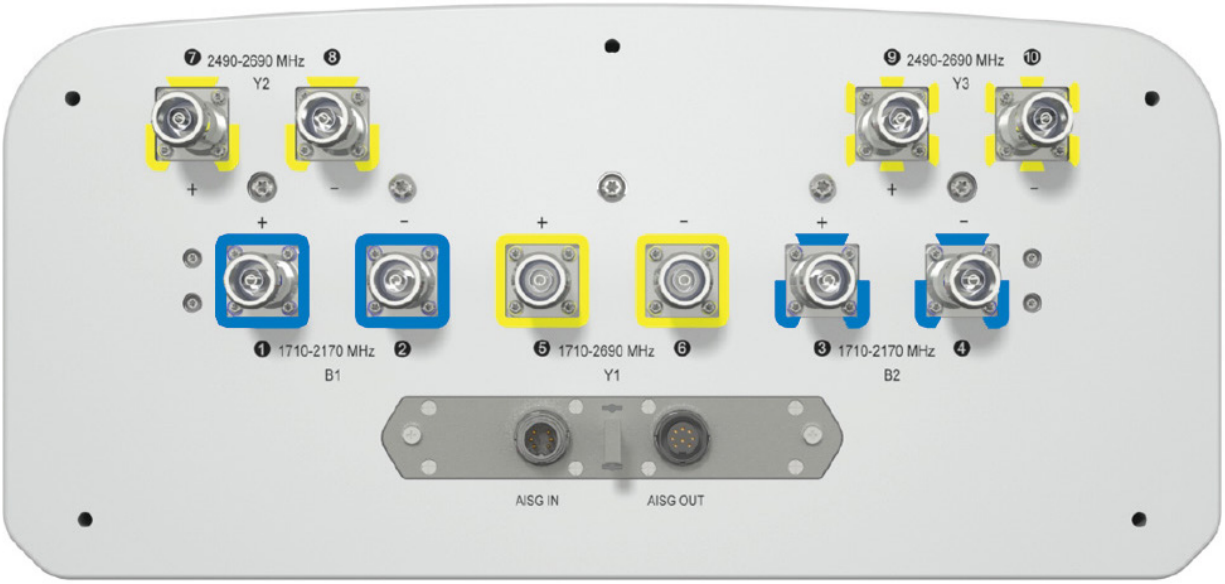

ARRAY LAYOUT

ARRAY	FREQUENCY	CONNECTOR	CONNECTOR TYPE	RET	AISG RET UID
B1	1710-2170 MHz	1-2	(2x) 4.3-10 Female	B1	RFxxxxxxxxxxx-B1
B2	1710-2170 MHz	3-4	(2x) 4.3-10 Female	B2	RFxxxxxxxxxxx-B2
Y1	1710-2690 MHz	5-6	(2x) 4.3-10 Female	Y1	RFxxxxxxxxxxx-Y1
Y2	2490-2690 MHz	7-8	(2x) 4.3-10 Female	Y2	RFxxxxxxxxxxx-Y2
Y3	2490-2690 MHz	9-10	(2x) 4.3-10 Female	Y3	RFxxxxxxxxxxx-Y3

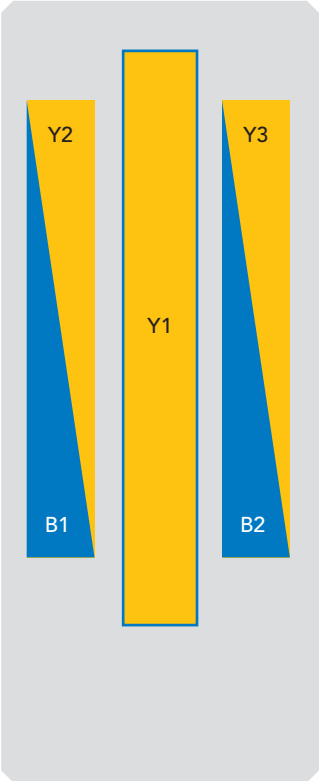

The illustration is not shown to scale.

APXVLRRMM15B_43-C-I20

MECHANICAL SPECIFICATIONS

Length		mm (in)	1500 (59.1)
Width		mm (in)	429 (16.9)
Depth		mm (in)	199 (7.8)
Net Weight - Antenna Only		kg (lbs)	21.8 (48.1)
Net Weight - Mounting Hardware Only		kg (lbs)	4.5 (9.9)
Wind Load Rated at 150 km/h (93 mph)	Front	N (lbf)	783 (176)
	Side	N (lbf)	265 (60)
	Rear	N (lbf)	822 (185)
Survival Wind Speed / Rated Wind Speed		km/h (mph)	200 (150)
Connector Type		--	(10x) 4.3-10 Female, (2x) AISG Connectors (1 Male, 1 Female) at Bottom
Radome Color		---	Light Grey RAL7035
Radome Material		---	Fiberglass
Lightning Protection		---	Direct Ground
Shipping	Packing Size (Length x Width x Depth)	mm (in)	1785 x 525 x 295 (70.3 x 20.7 x 11.6)
	Shipping Weight	kg (lbs)	28.3 (62.4)

ENVIRONMENTAL SPECIFICATIONS

Environmental Standard	---	ETS 300 019
Operating Temperature	degrees	-40° to +60° C (-40° to +140° F)
Product Environmental Compliance	---	Product is RoHS Compliant

APXVLRRMM15B_43-C-I20

ACCESSORIES

Accessories may be ordered separately unless otherwise indicated.

ITEM	MODEL NUMBER	WEIGHT
Beam Tilt Mounting Bracket Kit for Pole Diameter 50-110 mm (2.0-4.3 in) *Shipped with antenna*	APM50-B1	4.5 kg (9.9 lbs)

INSTALLATION

Please read all installation notes before installing product.

⚠	Always attach the antenna using all mounting points.
	Do not install antenna with the connectors facing upwards.

EXTERNAL DOCUMENT LINKS

APM50 Mounting Kit Series Installation Instructions

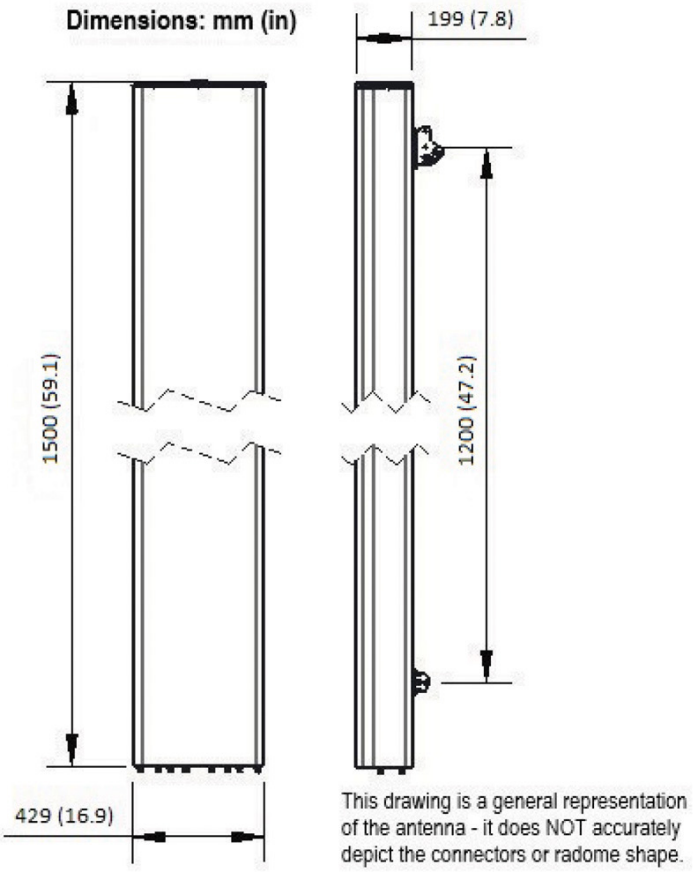

NOTES

Specifications follow BASTA guidelines.

For additional mounting information, please check **External Document Links**.

For Radiating Patterns: Request pattern files