APXVBLL26B2_43-C-I20

Features

- 2 ports / 1 cross pol system in low band (690-960 MHz)
- 4 ports / 2 cross pol systems in high band (1695-2690 MHz)
- Integrated and field replaceable SRET
- ACU HW version: HRLS200608H1.00
- Compliant with AISG v2.0 and 3GPP

PRODUCT OVERVIEW				
	Frequency Range (MHz)	(1x) 690-960	(2x) 1695-2690	
	Array	R1	Y1	Y2
	Connector	1-2	3-4	5-6
		6 PORTS		
	Polarization	XPOL		
	Azimuth Beamwidth (avg)	65°	65°	
	Electrical Downtilt	2-12°	2-10°	
	Dimensions	2690 x 380 x 156 mm (105.9 x 15.0 x 6.1 in)		

ORDERING OPTIONS Select from the following ordering options

ANTENNA MODEL NUMBER	CONFIGURATION	MOUNTING HARDWARE	MOUNTING PIPE DIAMETER	SHIPPING WEIGHT
APXVBLL26B2_43-C-I20	ACU-I20-H12I Internal RET Included	APM50-H2 Beam Tilt Kit Included	50-125 mm (2.0-4.9 in)	36.3 kg (80 lbs)

APXVBLL26B2_43-C-I20

ELECTRICAL SPECIFICATIONS			R1		
Frequency Range		MHz	690-960		
		MHz	690-806	790-894	880-960
Polarization		---	±45°		
Gain	Over all Tilts	dBi	16.3 ± 0.7	17.0 ± 0.4	17.4 ± 0.3
	Max Gain	dBi	17.0	17.4	17.7
Azimuth Beamwidth (3 dB)		degrees	66.2° ± 1.5°	64.7° ± 1.0°	61.4° ± 2.5°
Elevation Beamwidth (3 dB)		degrees	8.5° ± 0.5°	7.7° ± 0.5°	7° ± 0.4°
Electrical Downtilt		degrees	2-12°		
Impedance		Ohms	50Ω		
VSWR (Return Loss)		---	1.5:1 (-14 dB)		
Passive Intermodulation		dBc	-153 (3rd Order for 2x20 W Carriers)		
Front-to-Back Ratio, Total Power, ± 30°		dB	23.9	24.2	25.3
First Upper Side Lobe Suppression		dB	16.2	16.2	16.5
Cross Polar Discrimination Over Sector		dB	8.8	9.4	6.7
Cross Polar Discrimination (XPD) at Mechanical Boresight (0°)		dB	28.6	27.4	25.4
Maximum Effective Power Per Port		Watts	250 W		
Cross Polar Isolation		dB	28		
Interband Isolation		dB	28		

Specifications follow BASTA guidelines.

ELECTRICAL SPECIFICATIONS			Y1				
Frequency Range		MHz	1695-2690				
		MHz	1695-1880	1850-1990	1920-2170	2300-2400	2490-2690
Polarization		---	±45°				
Gain	Over all Tilts	dBi	16.9 ± 0.5	17.7 ± 0.4	17.8 ± 0.4	17.8 ± 0.3	18.1 ± 0.4
	Max Gain	dBi	17.4	18.1	18.2	18.1	18.5
Azimuth Beamwidth (3 dB)		degrees	70.7° ± 7.5°	63.3° ± 5.6°	64.1° ± 4.8°	64.7° ± 2.9°	63.9° ± 1.9°
Elevation Beamwidth (3 dB)		degrees	5.3° ± 0.3°	5.0° ± 0.3°	4.7° ± 0.4°	4.0° ± 0.2°	3.8° ± 0.2°
Electrical Downtilt		degrees	2-10°				
Impedance		Ohms	50Ω				
VSWR (Return Loss)		---	1.5:1 (-14 dB)				
Passive Intermodulation		dBc	-153 (3rd Order for 2x20 W Carriers)				
Front-to-Back Ratio, Total Power, ± 30°		dB	22	26.8	27	25.1	19.5
First Upper Side Lobe Suppression		dB	13.9	13.5	13.6	14.4	18.6
Cross Polar Discrimination Over Sector		dB	8.6	7.5	8.1	6.8	1.6
Cross Polar Discrimination (XPD) at Mechanical Boresight (0°)		dB	23.9	24	21.3	25.7	28.2
Maximum Effective Power Per Port		Watts	250 W				
Cross Polar Isolation		dB	28				
Interband Isolation		dB	28				

Specifications follow BASTA guidelines.

APXVBLL26B2_43-C-I20

ELECTRICAL SPECIFICATIONS			Y2				
Frequency Range		MHz	1695-2690				
		MHz	1695-1880	1850-1990	1920-2170	2300-2400	2490-2690
Polarization		---	±45°				
Gain	Over all Tilts	dBi	17.0 ± 0.5	17.8 ± 0.4	17.9 ± 0.4	18.0 ± 0.3	18.3 ± 0.4
	Max Gain	dBi	17.5	18.2	18.3	18.3	18.7
Azimuth Beamwidth (3 dB)		degrees	69.8° ± 8.5°	63° ± 5.1°	63.5° ± 3.7°	64.5° ± 3.2°	63.8° ± 2.1°
Elevation Beamwidth (3 dB)		degrees	5.3° ± 0.4°	5.0° ± 0.4°	4.7° ± 0.5°	4.0° ± 0.2°	3.8° ± 0.2°
Electrical Downtilt		degrees	2-10°				
Impedance		Ohms	50Ω				
VSWR (Return Loss)		---	1.5:1 (-14 dB)				
Passive Intermodulation		dBc	-153 (3rd Order for 2x20 W Carriers)				
Front-to-Back Ratio, Total Power, ± 30°		dB	21.2	25.7	27.4	24.1	20.0
First Upper Side Lobe Suppression		dB	14.2	13.9	14.3	16.9	19.3
Cross Polar Discrimination Over Sector		dB	10.2	6.7	7.1	7.1	1.5
Cross Polar Discrimination (XPD) at Mechanical Boresight (0°)		dB	25.9	24.9	24.5	20.4	23.9
Maximum Effective Power Per Port		Watts	250 W				
Cross Polar Isolation		dB	28				
Interband Isolation		dB	28				

Specifications follow BASTA guidelines.

APXVBLL26B2_43-C-I20

BOTTOM VIEW - LABELING

ARRAY LAYOUT

ARRAY	FREQUENCY	CONNECTOR	CONNECTOR TYPE	RET	AISG RET UID
R1	690-960 MHz	1-2	(2x) 4.3-10 Female	R1	RFxxxxxxxxxxx-R1
Y1	1695-2690 MHz	3-4	(2x) 4.3-10 Female	Y1	RFxxxxxxxxxxx-Y1
Y2	1695-2690 MHz	5-6	(2x) 4.3-10 Female	Y2	RFxxxxxxxxxxx-Y2

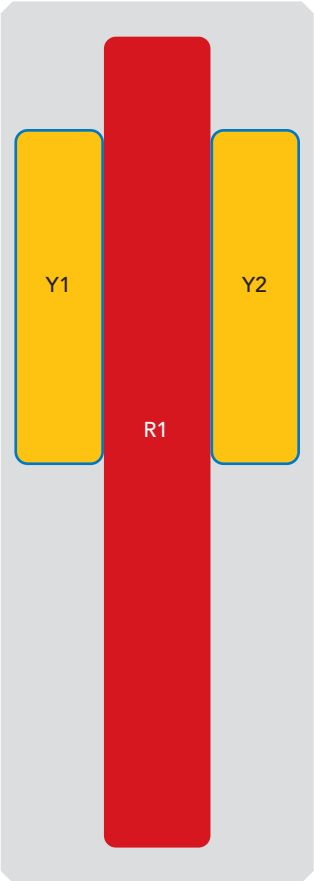

The illustration is not shown to scale.

APXVBLL26B2_43-C-I20

MECHANICAL SPECIFICATIONS

Length		mm (in)	2690 (105.9)
Width		mm (in)	380 (15.0)
Depth		mm (in)	156 (6.1)
Net Weight - Antenna Only		kg (lbs)	28.5 (62.8)
Net Weight - Mounting Hardware Only		kg (lbs)	5.5 (12.1)
Wind Load Rated at 150 km/h (93 mph)	Front	N (lbf)	870 (196)
	Side	N (lbf)	450 (101)
	Rear	N (lbf)	970 (218)
Survival Wind Speed / Rated Wind Speed		km/h (mph)	200 (150)
Connector Type		--	(6x) 4.3-10 Female, (2x) AISG Connectors (1 Male, 1 Female) at Bottom
Radome Color		---	Light Grey RAL7035
Radome Material		---	Fiberglass
Lightning Protection		---	DC Ground
Shipping	Packing Size (Length x Width x Depth)	mm (in)	2890 x 473 x 278 (113.8 x 18.6 x 10.9)
	Shipping Weight	kg (lbs)	36.3 (80)

ENVIRONMENTAL SPECIFICATIONS

Environmental Standard	---	ETS 300 019
Operating Temperature	degrees	-40° to +60° C (-40° to +140° F)
Product Environmental Compliance	---	Product is RoHS Compliant

APXVBLL26B2_43-C-I20

ACCESSORIES

Accessories may be ordered separately unless otherwise indicated.

ITEM	MODEL NUMBER	WEIGHT
Beam Tilt Mounting Bracket Kit for Pole Diameter 50-125 mm (2.0-4.9 in) *Shipped with antenna*	APM50-H2	5.5 kg (12.1 lbs)

INSTALLATION

Please read all installation notes before installing product.

⚠	Always attach the antenna using all mounting points.
	Do not install antenna with the connectors facing upwards.

EXTERNAL DOCUMENT LINKS

APM50 Mounting Kit Series Installation Instructions

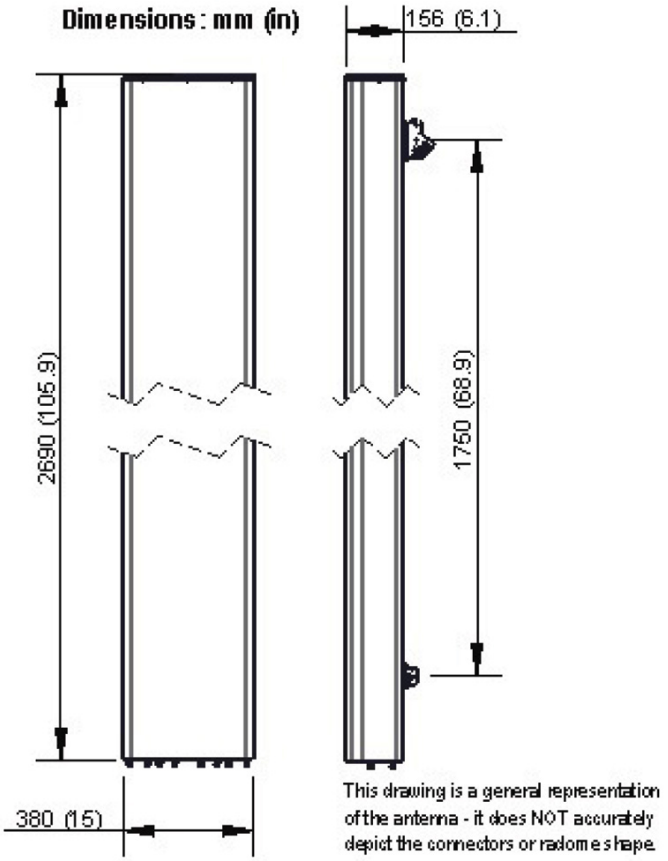

NOTES

Specifications follow BASTA guidelines.

For additional mounting information, please check **External Document Links**.

For Radiating Patterns: Request pattern files