# ACU-A20-SR

## Features

The ACU-A20-SR Antenna Control Unit (ACU) is part of the complete Amphenol AISG compliant Optimizer RT® remote antenna control system. The ACU-A20-SR has a smaller mounting footprint than previous ACUs. This is important for multi-band antennas with several internally mounted ACUs.

The Optimizer RT® remote antenna control system permits accurate antenna tilt operations to be conducted - without riggers or crane equipment - either from the tower base or the network management center.

- Compliant with AISG standards
- Enables remote electrical tilt of antennas
- Smaller footprint than the ACU-A20-S
- Travel time < 15 seconds typically

| | | |
|---|---|---|
| PRODUCT OVERVIEW | Product Type | Antenna Control Unit |
| | Configuration | Optimizer RT® Antenna Control Unit (ACU) for AISG v2.0 |
| | Applications | Wireless Communication |
| | Firmware | Remotely upgradeable (including AISG v2.0) |
| | Standards | RoHs compliant and CE compliant: Directive 1999/5/EC Radio Equipment and Telecommunication Terminal Equipment and the mutual recognition of their conformity, Directive 2006/95/EC Electrical Equipment designed for use within certain voltage limits, Directive 2002/95/EC for the Restriction on the use of Hazardous Substances (RoHS) in electrical and electronic equipment. |

**MECHANICAL SPECIFICATIONS**

| | | |
|---|---|---|
| Connectors | --- | AISG DIN female and AISG DIN male, Ready for daisy-chaining |
| Temperature Range | degrees | -40° to 70° C (-40° to 158° F) |
| Mounting | --- | Directly onto antenna |
| Dimensions, Height x Width x Depth | mm (in) | 103 x 41 x 75 (4.0 x 1.6 x 3.0) |
| Housing | --- | Aluminium, with extruded body and molded end-caps |
| Mounting Screw | --- | M4 |
| Motor Type | --- | Stepper |
| Continuous Torque | Nm | 0.15 |
| Angular Resolution for Shaft Turn | --- | 0.25 turn (0.1° as tilt angle) |
| Lifetime | --- | 36,000 antenna adjustments |

# ACU-A20-SR

## TESTING AND ENVIRONMENTAL

| | | |
|---|---|---|
| Ingress Protection | --- | IP34 (mounted) |

## ELECTRICAL SPECIFICATIONS

| | | |
|---|---|---|
| Nominal Current | mA | 50 (stand-by), 300 (during tilt) |
| Ripple and Noise | mVpp and mV | 20 (stand-by), 40 (during tilt) |

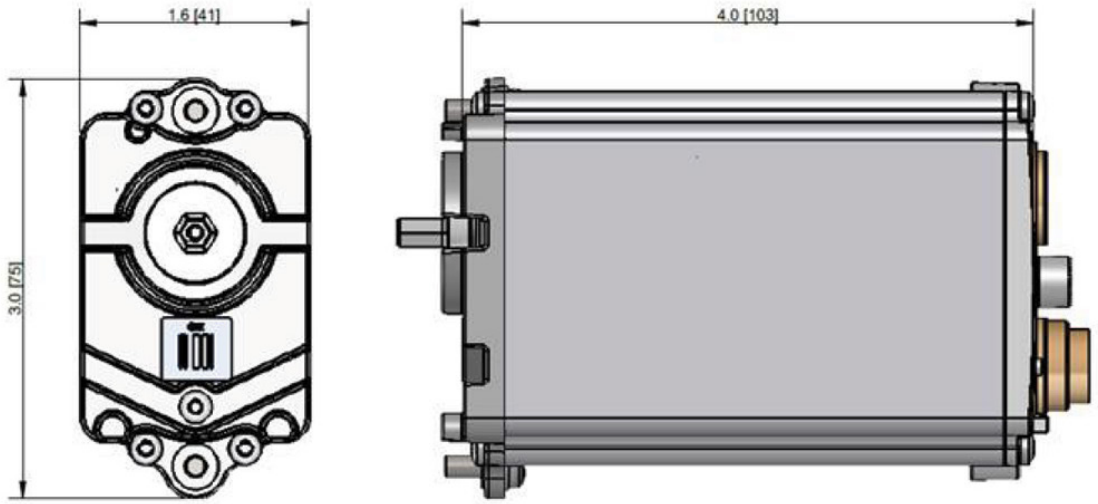


## NOTES

| |
|---|
| Radiated emission in the semi anechoic chamber: EN 55022 (1998), with the limits class B specified in the EN 300386 V1.3.3 (2005) |
| Radiated emission in the semi anechoic chamber: FCC part 15 |
| Conducted emission on the data cable: EN 55022 (1998), with the limits class B specified in the EN 300386 V1.3.3 (2005) |
| Immunity to electrostatic discharges: EN 61000-4-2, {with the acceptance criteria B for the levels specified in the EN 300386 V1.3.3 |
| Immunity to radiated electromagnetic field: EN 61000-4-3, with the acceptance criteria A for the levels specified in the EN 300386 V1.3.3 |
| Immunity to radiated electromagnetic field : AISG1.1 and AISG 2.0, with the acceptance criteria A for the levels specified in the AISG1.1 and AISG 2.0 |
| Immunity to fast transient signals in bursts on the cable: EN 61000-4-4, with the acceptance criteria B for the levels specified in the EN300386 V1.3.3 |
| Immunity to surges (lighting protection): EN 61000-4-5, with the acceptance criteria B for the levels specified in the EN 300386 V1.3.3 |