# 5863288G

2-Band | 4-Port | XPOL | Panel Antenna | Variable Tilt | 2597 mm

- Dual band antenna, dual polarisation, 4 connectors
- Continuously adjustable tilt 0-10° / 0-10°
- RET versions
- Integrated RET Units

| ORDERING OPTIONS | MODEL NUMBER |
|---|---|
| Antenna with 7/16-DIN Connectors | 5863288G |

| ACCESS PORT DESCRIPTION (CONNECTORS) | | |
|---|---|---|
| This antenna has 4 colour-coded connectors located at the bottom face. | | |
| Frequency Designation | R1 | B1 |
| Frequency Range | 790-960 MHz | 1710-2180 MHz |
| Polarisation | Xpol | Xpol |
| Horizontal Beamwidth | 65° | 65° |
| Electrical Downtilt Range | 0-10° | 0-10° |
| Connector Type | (2x) 7/16-DIN Female | (2x) 7/16-DIN Female |

| ELECTRICAL CHARACTERISTICS | | R1 | |
|---|---|---|---|
| Frequency Bands | | 790-960 MHz | |
| | | 790-894 | 880-960 |
| Gain | At Mid Tilt | 16.6 dBi | 17.2 dBi |
| | Over All Tilts | 16.6 ± 0.5 dBi | 17.2 ± 0.6 dBi |
| Input Impedance | | 50Ω | |
| VSWR | | < 1.5 | |
| Polarisation | | ±45° | |
| Horizontal Beamwidth (-3 dB) | | 65° ± 4.5° | 64° ± 4.5° |
| Vertical Beamwidth (-3 dB) | | 8.0° ± 0.8° | 7.2° ± 0.6° |
| Electrical Downtilt Range | | 0-10° | |
| Cross-Polar Isolation | | > 28 dB | |
| Port-to-Port Isolation | | > 28 dB | |
| Upper Sidelobe Suppression | First Upper Lobe | > 17 dB | > 17 dB |
| | Peak to 20° | > 15 dB | > 15 dB |
| Front-to-Back Ratio (@ 180° ± 30°) | | > 25 dB | > 25 dB |
| Cross Polar Discrimination | Main Direction | > 18 dB | > 17 dB |
| | Sector Edges | > 8 dB | > 8 dB |
| Maximum Power (Per Port) | | 350 W (at 50°C ambient temperature) | |
| Intermodulation 3rd (2x43 dBm Carrier) | | < -150 dBc | |
| Grounding | | DC Ground | |

Several patents pending regarding this product. Quoted performance parameters are provided to offer typical, peak or range values only and may vary as a result of normal testing, manufacturing and operational conditions. Extreme operational conditions and/or stress on structural supports is beyond our control. Such conditions may result in damage to this product. Improvements to products may be made without notice.

# 5863288G

2-Band | 4-Port | XPOL | Panel Antenna | Variable Tilt | 2597 mm

| ELECTRICAL CHARACTERISTICS | | B1 | | |
|---|---|---|---|---|
| Frequency Bands | | 1710-2180 MHz | | |
| | | 1710-1880 | 1850-1990 | 1920-2180 |
| Gain | At Mid Tilt | 17.1 dBi | 17.6 dBi | 17.9 dBi |
| | Over All Tilts | 17.1 ± 0.6 dBi | 17.6 ± 0.6 dBi | 17.9 ± 0.6 dBi |
| Input Impedance | | 50Ω | | |
| VSWR | | < 1.5 | | |
| Polarisation | | ±45° | | |
| Horizontal Beamwidth (-3 dB) | | 66° ± 4.8° | 63° ± 4.6° | 61° ± 4.5° |
| Vertical Beamwidth (-3 dB) | | 6.8° ± 0.7° | 6.3° ± 0.6° | 5.8° ± 0.6° |
| Electrical Downtilt Range | | 0-10° | | |
| Cross Polar Isolation | | > 28 dB | | |
| Port-to-Port Isolation | | > 28 dB | | |
| Upper Sidelobe Suppression | First Upper Lobe | > 17 dB | > 17 dB | > 17 dB |
| | Peak to 20° | > 15 dB | > 15 dB | > 15 dB |
| Front-to-Back Ratio (@ 180° ± 30°) | | > 25 dB | > 25 dB | > 25 dB |
| Cross Polar Discrimination | Main Direction | > 22 dB | > 20 dB | > 19 dB |
| | Sector Edges | > 9 dB | > 9 dB | > 8 dB |
| Maximum Power (Per Port) | | 250 W (at 50°C ambient temperature) | | |
| Intermodulation 3rd (2x43 dBm Carrier) | | < -150 dBc | | |
| Grounding | | DC Ground | | |

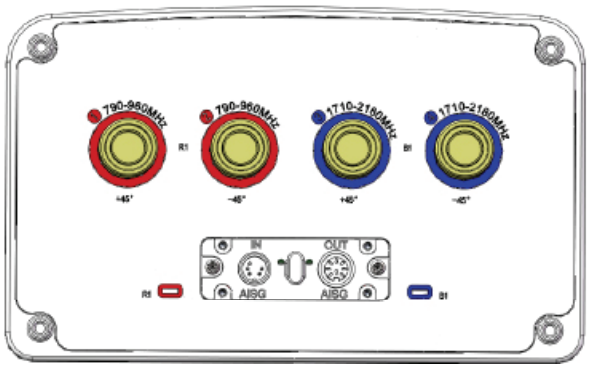


| ARRAY LAYOUT | ARRAY | FREQUENCY | CONNECTOR | CONNECTOR TYPE |
|---|---|---|---|---|
| | R1 | 790-960 | 1-2 | 7/16-DIN Female |
| | B1 | 1710-2180 | 3-4 | 7/16-DIN Female |

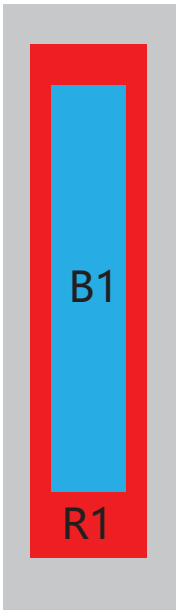


*Diagram shown at right depicts the view from the front of the antenna.*
*The illustration is not shown to scale.*

Several patents pending regarding this product. Quoted performance parameters are provided to offer typical, peak or range values only and may vary as a result of normal testing, manufacturing and operational conditions. Extreme operational conditions and/or stress on structural supports is beyond our control. Such conditions may result in damage to this product. Improvements to products may be made without notice.

# 5863288G

2-Band | 4-Port | XPOL | Panel Antenna | Variable Tilt | 2597 mm

| INTEGRATED RET PROPERTIES | |
|---|---|
| Protocol | Compliant with 3GPP/AISGv2.0 |
| Power Supply | 10-30VDC |
| Adjustment Time (Full Range) | ≤ 90 sec (typical, depending on antenna type) |
| Power Consumption | < 2 W (Idle); < 10 W (In Motion) |
| Accuracy | ≤ 0.5° |
| Hardware Interface | RS485 and Power |
| Safety Standard | Compliant to EN 60950/UL 60950/ RoHS, CE |
| Remote Control | Can manage from OMC, BTS/Node B |
| Adjustment Cycles | > 20,000 |
| Torque Max | ≥ 160 mN.m |
| Lightning Protection Rating | IEC 61000-4-5 Current Pulse Profile, 8/20 µs 10 Repetitions Min. @ 8 kA |
| Connectors | (2x) 8-Pin Circle Connector<br>According to IEC 60130-9 and AISG<br>Daisy Chain In: Male; Daisy Chain Out: Female<br>Pin 3: RS485+; Pin 5: RS485-; Pin 6: 10~30V; Pin 7: GND |

| MECHANICAL CHARACTERISTICS | | |
|---|---|---|
| Dimensions (Height x Width x Depth) | | 2597 x 277 x 167 mm (102.2 x 10.9 x 6.6 in) |
| Weight (excluding mounting accessory) | | 23.5 kg (51.8 lbs) |
| Shipping Weight | | 29.5 kg (65.0 lbs) |
| Radome Material | | UPVC |
| Maximum Wind Speed | | 200 km/h (124.3 mph) |
| Wind Load at 150 km/h | Front | 660 N (148.3 lbf) |
| | Lateral | 740 N (166.3 lbf) |

| MOUNTING KIT OPTIONS | POLE DIAMETER | MECHANICAL TILT RANGE |
|---|---|---|
| All mounting bracket kits are ordered separately unless otherwise indicated. | | |
| Mounting Bracket Kit (Included) | Ø50-Ø125 mm (Ø2.0-Ø4.9 in) | 0-10° |

| PACKAGING |
|---|
| Carton Box<br>2.797 x 0.372 x 0.287 m<br>(110.1 x 14.6 x 11.3 in) |

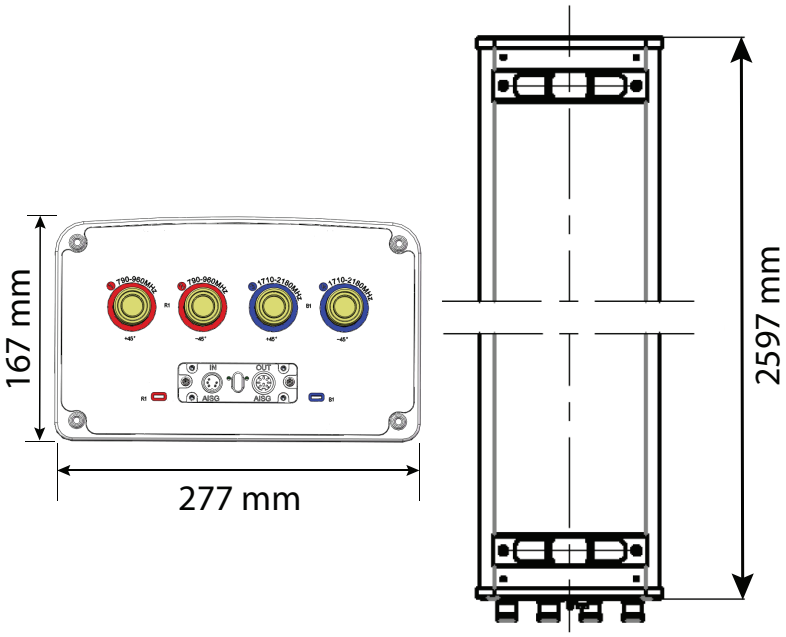


Several patents pending regarding this product. Quoted performance parameters are provided to offer typical, peak or range values only and may vary as a result of normal testing, manufacturing and operational conditions. Extreme operational conditions and/or stress on structural supports is beyond our control. Such conditions may result in damage to this product. Improvements to products may be made without notice.