5780700

5780700G 5780700Dx

Deca Band, 20-Port, 65°, XPOL, Panel Antenna, Variable Tilt, 2697 mm

Integra

- Deca band antenna, dual polarisation, 20 connectors
- Integra compatible - ability to upgrade and recycle, saving 50% carbon emission
- Independent tilt on each band 2-12° / 2-12° / 2-12° / 2-12° / 2-12° / 2-12° / 2-12° / 2-12° / 2-12° / 2-12°
- MET and RET versions, 3GPP/AISG2.0, in multiple single RET (multiple device type1) or in Multi-RET (device type 17, with firmware above MD3.10).
- Our patented, RET module controlling all tilt angles, fully inserted inside the antenna (field replaceable).
- 5G optimal integration with optional mMIMO & 8T8R Hybrid Kits (compatibility list available on request).

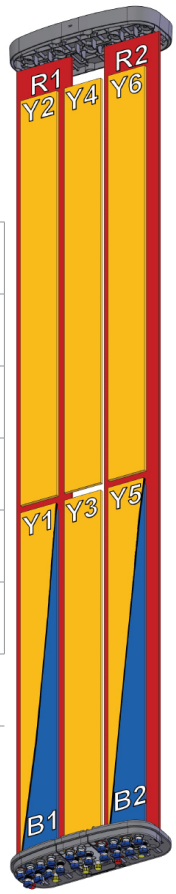

PRODUCT OVERVIEW

Frequency Range (MHz)	698-960	698-960	1427-2180	1427-2180	2300-2690	1427-2690	1427-2690	1427-2690	2300-2690	1427-2690
Array	R1	R2	B1	B2	Y1	Y2	Y3	Y4	Y5	Y6
Connector	1-2	3-4	5-6	7-8	9-10	11-12	13-14	15-16	17-18	19-20
Polarization	XPOL	XPOL	XPOL	XPOL	XPOL	XPOL	XPOL	XPOL	XPOL	XPOL
Azimuth Beamwidth (avg)	65°	65°	65°	65°	65°	65°	65°	65°	65°	65°
Electrical Downtilt	2-12°	2-12°	2-12°	2-12°	2-12°	2-12°	2-12°	2-12°	2-12°	2-12°
Dimensions	2697 x 472 x 205 mm									

ORDERING OPTIONS Select from the different options listed below

SELECT ELECTRICAL DOWNTILT CONTROL & AISG PROTOCOL	SELECT ACTUATOR	SELECT CONNECTOR TYPE	ANTENNA MODEL NUMBER
Manual Electrical Tilt (MET)	---	4.3-10 Female	5780700
Remote Electrical Tilt (RET) AISG v2.0 / 3GPP	Multi-Device Control Unit (MDCU)	4.3-10 Female	5780700G
	Multi-Device Dual Unit (MDDU)	4.3-10 Female	5780700Dx*

5780700

5780700G 5780700Dx

Deca Band, 20-Port, 65°, XPOL, Panel Antenna, Variable Tilt, 2697 mm

ELECTRICAL SPECIFICATIONS Ultra Low Band		**R1**		
Frequency Range	MHz	698-960		
	MHz	698-806	790-862	880-960
Polarization	---	±45°		
Gain, Over all Tilts	dBi	15.5 ± 0.5	16.0 ± 0.5	16.5 ± 0.5
Azimuth Beamwidth	degrees	75° ± 5°	69° ± 5°	60° ± 5°
Elevation Beamwidth	degrees	8.5° ± 0.5°	7.5° ± 0.5°	7.0° ± 0.5°
Electrical Downtilt	degrees	2°-12°		
Impedance	Ohms	50		
VSWR (Return Loss)	--- (dB)	< 1.5 (> 14)		
Passive Intermodulation 3rd Order for 2 x 20W Carriers	dBc	< -153		
Front-to-Back Ratio, Total Power, ±30°	dB	> 25	> 23	> 25
Upper Sidelobe Suppression, Peak to 20°	dB	> 15	> 15	> 15
Cross Polar Discrimination (XPD) Sector Edges (±60°)	dB	> 9	> 8	> 7
Maximum Effective Power Per Port	Watts	250 W		
Inter/Intra Cluster Isolation	dB	> 25		

All parameters are compliant with BASTA revision V11.1

ELECTRICAL SPECIFICATIONS Ultra Low Band		**R2**		
Frequency Range	MHz	698-960		
	MHz	698-806	790-862	880-960
Polarization	---	±45°		
Gain, Over all Tilts	dBi	15.5 ± 0.5	16.0 ± 0.5	16.5 ± 0.5
Azimuth Beamwidth	degrees	75° ± 5°	69° ± 5°	60° ± 5°
Elevation Beamwidth	degrees	8.5° ± 0.5°	7.5° ± 0.5°	7.0° ± 0.5°
Electrical Downtilt	degrees	2°-12°		
Impedance	Ohms	50		
VSWR (Return Loss)	--- (dB)	< 1.5 (> 14)		
Passive Intermodulation 3rd Order for 2 x 20W Carriers	dBc	< -153		
Front-to-Back Ratio, Total Power, ±30°	dB	> 25	> 23	> 25
Upper Sidelobe Suppression, Peak to 20°	dB	> 15	> 15	> 15
Cross Polar Discrimination (XPD) Sector Edges (±60°)	dB	> 9	> 8	> 7
Maximum Effective Power Per Port	Watts	250 W		
Inter/Intra Cluster Isolation	dB	> 25		

All parameters are compliant with BASTA revision V11.1

5780700

5780700G 5780700Dx

Deca Band, 20-Port, 65°, XPOL, Panel Antenna, Variable Tilt, 2697 mm

ELECTRICAL SPECIFICATIONS MEGA Wide Band

B1

Frequency Range	MHz	1427-2180		
	MHz	1427-1518	1695-1880	1920-2180
Polarization	---	±45°		
Gain, Over all Tilts	dBi	15.5 ± 0.5	16.0 ± 0.5	16.5 ± 0.5
Azimuth Beamwidth	degrees	70° ± 5°	69° ± 5°	66° ± 5°
Elevation Beamwidth	degrees	9° ± 0.5°	7° ± 0.5°	6° ± 0.5°
Electrical Downtilt	degrees	2°-12°		
Impedance	Ohms	50		
VSWR (Return Loss)	--- (dB)	< 1.5 (> 14)		
Passive Intermodulation 3rd Order for 2 x 20W Carriers	dBc	< -153		
Front-to-Back Ratio, Total Power, ±30°	dB	> 25	> 27	> 26
Upper Sidelobe Suppression, Peak to 20°	dB	> 15	> 15	> 15
Cross Polar Discrimination (XPD) Sector Edges (±60°)	dB	> 7.5	> 7	> 8
Maximum Effective Power Per Port	Watts	200 W		
Inter/Intra Cluster Isolation	dB	> 25		

ELECTRICAL SPECIFICATIONS MEGA Wide Band

B2

Frequency Range	MHz	1427-2180		
	MHz	1427-1518	1695-1880	1920-2180
Polarization	---	±45°		
Gain, Over all Tilts	dBi	15.5 ± 0.5	16.0 ± 0.5	16.5 ± 0.5
Azimuth Beamwidth	degrees	70° ± 5°	69° ± 5°	66° ± 5°
Elevation Beamwidth	degrees	9° ± 0.5°	7° ± 0.5°	6° ± 0.5°
Electrical Downtilt	degrees	2°-12°		
Impedance	Ohms	50		
VSWR (Return Loss)	--- (dB)	< 1.5 (> 14)		
Passive Intermodulation 3rd Order for 2 x 20W Carriers	dBc	< -153		
Front-to-Back Ratio, Total Power, ±30°	dB	> 25	> 27	> 26
Upper Sidelobe Suppression, Peak to 20°	dB	> 15	> 15	> 15
Cross Polar Discrimination (XPD) Sector Edges (±60°)	dB	> 7.5	> 7	> 8
Maximum Effective Power Per Port	Watts	200 W		
Inter/Intra Cluster Isolation	dB	> 25		

5780700

5780700G 5780700Dx

Deca Band, 20-Port, 65°, XPOL, Panel Antenna, Variable Tilt, 2697 mm

ELECTRICAL SPECIFICATIONS MEGA Wide Band — **Y1**

Frequency Range	MHz	2300-2690	
	MHz	2300-2400	2490-2690
Polarization	---	±45°	
Gain, Over all Tilts	dBi	16 ± 0.5	16.5 ± 0.5
Azimuth Beamwidth	degrees	65° ± 5°	60° ± 5°
Elevation Beamwidth	degrees	5.5° ± 0.5°	5° ± 0.5°
Electrical Downtilt	degrees	2°-12°	
Impedance	Ohms	50	
VSWR (Return Loss)	--- (dB)	< 1.5 (> 14)	
Passive Intermodulation 3rd Order for 2 x 20W Carriers	dBc	< -153	
Front-to-Back Ratio, Total Power, ±30°	dB	> 23	> 24
Upper Sidelobe Suppression, Peak to 20°	dB	> 15	> 15
Cross Polar Discrimination (XPD) Sector Edges (±60°)	dB	> 5	> 6
Maximum Effective Power Per Port	Watts	200 W	
Inter/Intra Cluster Isolation	dB	> 25	

ELECTRICAL SPECIFICATIONS MEGA Wide Band — **Y2**

Frequency Range		MHz	1427-2690				
		MHz	1427-1518	1695-1880	1920-2180	2300-2400	2490-2690
Polarization		---	±45°				
Gain	Over all Tilts	dBi	15.5 ± 0.5	16.5 ± 0.5	17 ± 0.5	16.5 ± 0.5	16.5 ± 0.5
Azimuth Beamwidth		degrees	70° ± 5°	68° ± 5°	66° ± 3°	64° ± 5°	62° ± 5°
Elevation Beamwidth		degrees	8.5° ± 0.3°	7° ± 0.3°	6° ± 0.3°	5.5° ± 0.3°	5.0° ± 0.3°
Electrical Downtilt		degrees	2°-12°				
Impedance		Ohms	50				
VSWR (Return Loss)		--- (dB)	< 1.5 (> 14)				
Passive Intermodulation 3rd Order for 2 x 20W Carriers		dBc	< -153				
Front-to-Back Ratio, Total Power, ±30°		dB	> 24	> 26	> 28	> 26	> 25
Upper Sidelobe Suppression, Peak to 20°		dB	> 15	> 15	> 15	> 15	> 15
Cross Polar Discrimination (XPD) Sector Edges (±60°)		dB	> 10	> 8	> 8	> 7	> 7
Maximum Effective Power Per Port		Watts	200 W				
Inter/Intra Cluster Isolation		dB	> 25				

5780700

5780700G 5780700Dx

Deca Band, 20-Port, 65°, XPOL, Panel Antenna, Variable Tilt, 2697 mm

ELECTRICAL SPECIFICATIONS MEGA Wide Band — **Y3**

Frequency Range		MHz	1427-2690				
		MHz	1427-1518	1695-1880	1920-2180	2300-2400	2490-2690
Polarization		---	±45°				
Gain	Over all Tilts	dBi	15.6 ± 0.5	17.1 ± 0.5	17.4 ± 0.5	16.9 ± 0.5	17.4 ± 0.5
Azimuth Beamwidth		degrees	71.4° ± 5°	61.4° ± 5°	60.2° ± 3°	63.5° ± 5°	64.3° ± 5°
Elevation Beamwidth		degrees	7.1° ± 0.3°	6.0° ± 0.3°	5.3° ± 0.3°	4.8° ± 0.3°	4.2° ± 0.3°
Electrical Downtilt		degrees	2°-12°				
Impedance		Ohms	50				
VSWR (Return Loss)		--- (dB)	< 1.5 (> 14)				
Passive Intermodulation 3rd Order for 2 x 20W Carriers		dBc	< -153				
Front-to-Back Ratio, Total Power, ±30°		dB	> 28	> 27	> 28	> 28	> 28
Upper Sidelobe Suppression, Peak to 20°		dB	> 15	> 15	> 15	> 15	> 15
Cross Polar Discrimination (XPD) Sector Edges (±60°)		dB	> 10	> 8	> 8	> 7	> 7
Maximum Effective Power Per Port		Watts	200 W				
Inter/Intra Cluster Isolation		dB	> 25				

ELECTRICAL SPECIFICATIONS MEGA Wide Band — **Y4**

Frequency Range		MHz	1427-2690				
		MHz	1427-1518	1695-1880	1920-2180	2300-2400	2490-2690
Polarization		---	±45°				
Gain	Over all Tilts	dBi	15.6 ± 0.5	17.1 ± 0.5	17.4 ± 0.5	16.9 ± 0.5	17.4 ± 0.5
Azimuth Beamwidth		degrees	71.4° ± 5°	61.4° ± 5°	60.2° ± 3°	63.5° ± 5°	64.3° ± 5°
Elevation Beamwidth		degrees	7.1° ± 0.3°	6.0° ± 0.3°	5.3° ± 0.3°	4.8° ± 0.3°	4.2° ± 0.3°
Electrical Downtilt		degrees	2°-12°				
Impedance		Ohms	50				
VSWR (Return Loss)		--- (dB)	< 1.5 (> 14)				
Passive Intermodulation 3rd Order for 2 x 20W Carriers		dBc	< -153				
Front-to-Back Ratio, Total Power, ±30°		dB	> 28	> 27	> 28	> 28	> 28
Upper Sidelobe Suppression, Peak to 20°		dB	> 15	> 15	> 15	> 15	> 15
Cross Polar Discrimination (XPD) Sector Edges (±60°)		dB	> 10	> 8	> 8	> 7	> 7
Maximum Effective Power Per Port		Watts	200 W				
Inter/Intra Cluster Isolation		dB	> 25				

5780700

5780700G 5780700Dx

Deca Band, 20-Port, 65°, XPOL, Panel Antenna, Variable Tilt, 2697 mm

ELECTRICAL SPECIFICATIONS MEGA Wide Band

Y5

Frequency Range	MHz	2300-2690	
	MHz	2300-2400	2490-2690
Polarization	---	±45°	
Gain, Over all Tilts	dBi	16 ± 0.5	16.5 ± 0.5
Azimuth Beamwidth	degrees	65° ± 5°	60° ± 5°
Elevation Beamwidth	degrees	5.5° ± 0.5°	5.0° ± 0.5°
Electrical Downtilt	degrees	2°-12°	
Impedance	Ohms	50	
VSWR (Return Loss)	--- (dB)	< 1.5 (> 14)	
Passive Intermodulation 3rd Order for 2 x 20W Carriers	dBc	< -153	
Front-to-Back Ratio, Total Power, ±30°	dB	> 23	> 24
Upper Sidelobe Suppression, Peak to 20°	dB	> 15	> 15
Cross Polar Discrimination (XPD) Sector Edges (±60°)	dB	> 5	> 6
Maximum Effective Power Per Port	Watts	200 W	
Inter/Intra Cluster Isolation	dB	> 25	

ELECTRICAL SPECIFICATIONS MEGA Wide Band

Y6

Frequency Range	MHz	1427-2690				
	MHz	1427-1518	1695-1880	1920-2180	2300-2400	2490-2690
Polarization	---	±45°				
Gain Over all Tilts	dBi	15.5 ± 0.5	16.5 ± 0.5	17 ± 0.5	16.5 ± 0.5	16.5 ± 0.5
Azimuth Beamwidth	degrees	70° ± 5°	68° ± 5°	66° ± 3°	64° ± 5°	62° ± 5°
Elevation Beamwidth	degrees	8.5° ± 0.3°	7° ± 0.3°	6° ± 0.3°	5.5° ± 0.3°	5.0° ± 0.3°
Electrical Downtilt	degrees	2°-12°				
Impedance	Ohms	50				
VSWR (Return Loss)	--- (dB)	< 1.5 (> 14)				
Passive Intermodulation 3rd Order for 2 x 20W Carriers	dBc	< -153				
Front-to-Back Ratio, Total Power, ±30°	dB	> 24	> 26	> 28	> 26	> 25
Upper Sidelobe Suppression, Peak to 20°	dB	> 15	> 15	> 15	> 15	> 15
Cross Polar Discrimination (XPD) Sector Edges (±60°)	dB	> 10	> 8	> 8	> 7	> 7
Maximum Effective Power Per Port	Watts	200 W				
Inter/Intra Cluster Isolation	dB	> 25				

5780700

5780700G 5780700Dx

Deca Band, 20-Port, 65°, XPOL, Panel Antenna, Variable Tilt, 2697 mm

ELECTRICAL DOWNTILT CONTROL

For multiband antennas, electrical downtilt for each band can be controlled separately.

Manual Electrical Tilt (MET) Control	A colored knob at the end of the tilt indicator allows change of the tilt without need of a tool. The knob color is identical to the corresponding connector color. The manual tilt 'override' function is always available with no need to remove the physical RET motor.
Remote Electrical Tilt (RET) Control	The remote control of the electrical tilt is managed by a Multi-Device Control Unit (MDCU) or a Multi-Device Dual Unit (MDDU) inserted in the bottom of the antenna. *See details below and refer to the ordering options to see which actuators are available with this particular antenna.* A single actuator individually controls the tilt of each band (no need for daisy chain cables between the bands). This module does not add any additional length to the antenna.

RET ACTUATOR

Amphenol's **RET-READY** antennas are delivered with the RET Actuator already installed and pre-commissioned with all antenna parameters. Every RET device is factory configured and calibrated so the antenna is ready to be used once delivered to the site which means that there is no need for further installation of RET devices or for programming their configuration or for running a calibration process.

RET-READY ACTUATORS	Multi-Device Control Unit (MDCU). The MDCU is an electronic module that allows the remote control of the electrical downtilt (RET) in Amphenol antennas with factory embedded motors. The MDCU is factory installed. *Refer to the* ORDERING OPTIONS *for availability with this model.*
	Multi-Device Dual Unit (MDDU). The MDDU allows two separate RET Controllers to independently drive the RETs in antennas with factory embedded motors (for antenna sharing or two technologies). The MDDU is factory installed. *Refer to the* ORDERING OPTIONS *for availability with this model.*

Number of RET-READY Actuators		One per antenna
Input Voltage		+10 to +30 V
Power Consumption	Idle State (AISG P1)	0.5 W
	High Power Mode (AISG P2)	3 W
Protocol		3GPP/AISG 2.0
Tilt Change Duration		Less than 15 seconds, typical (may vary dependent on antenna type and outdoor temperature)
Precision		±0.5°
Tilt Change Capability		50,000 minimum
RET Interface	MDCU	One pair of AISG Male and Female (type IEC60130-9)
	MDDU	Two male AISG 8 pin connectors (type IEC60130-9 Ed 3.0)
Field Replaceable Unit		Yes

5780700

5780700G 5780700Dx

Deca Band, 20-Port, 65°, XPOL, Panel Antenna, Variable Tilt, 2697 mm

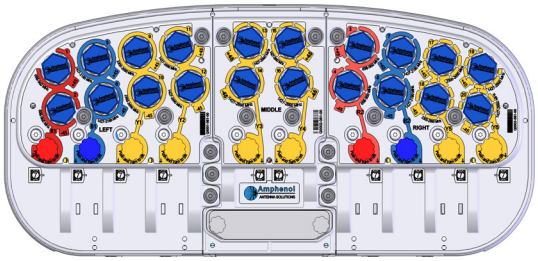

ARRAY LAYOUT	ARRAY	FREQUENCY	CONNECTOR	CONNECTOR TYPE
	R1	698-960	1-2	4.3-10 Female
	R2	698-960	3-4	4.3-10 Female
	B1	1427-2180	5-6	4.3-10 Female
	B2	1427-2180	7-8	4.3-10 Female
	Y1	2300-2690	9-10	4.3-10 Female
	Y2	1427-2690	11-12	4.3-10 Female
	Y3	1427-2690	13-14	4.3-10 Female
	Y4	1427-2690	15-16	4.3-10 Female
	Y5	2300-2690	17-18	4.3-10 Female
	Y6	1427-2690	19-20	4.3-10 Female

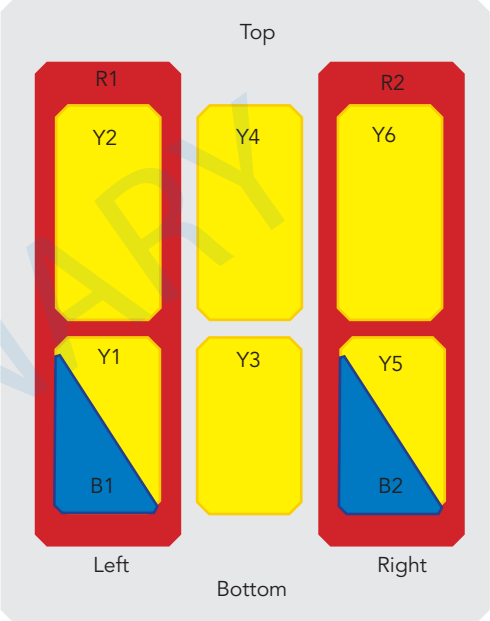

Diagram shown above depicts the view from the front of the antenna. The illustration is not shown to scale.

MECHANICAL SPECIFICATIONS

Length		mm (in)	2697 (106.1)
Width		mm (in)	472 (18.6)
Depth		mm (in)	205 (8.0)
Net Weight - Antenna Only		kg (lbs)	67.0 (147.7)
Mechanical Distance Between Mounting Points		mm (in)	Refer to Diagram
Windload (EN 1991-1-4:2005 using Wind Tunnel Coefficients)	Calculation	km/h (mph)	150 (93.2)
	Frontal	N (lbf)	989 (222.3)
	Lateral	N (lbf)	628 (141.2)
	Rearside	N (lbf)	998 (224.4)
	Maximum	N (lbf)	1830 (411.4)
Survival Wind Speed		km/h (mph)	200 (124)
Radome Color		---	Gray RAL7035
Radome Material		---	Outdoor Fiberglass
Lightning Protection		---	Direct Ground
Shipping	Shipping Dimensions (Length x Width x Depth)	mm (in)	2940 x 540 x 370 (115.7 x 21.2 x 14.5)
	Shipping Weight	kg (lbs)	78.0 (172.0)
	Shipping Volume	m^3 (ft^3)	0.587 (20.7)

Quoted performance parameters are provided to offer typical, peak or range values only and may vary as a result of normal testing, manufacturing and operational conditions. Extreme operational conditions and/or stress on structural supports is beyond our control. Such conditions may result in damage to this product. Improvements to products may be made without notice.

5780700

5780700G 5780700Dx

Deca Band, 20-Port, 65°, XPOL, Panel Antenna, Variable Tilt, 2697 mm

ENVIRONMENTAL SPECIFICATIONS

Environmental Standard	---	ETS 300 019
Operating Temperature	° C (° F)	-40° to +60° (-40° to 140°)
Product Environmental Compliance	---	Product is RoHs Compliant

ACCESSORIES

All accessories are ordered separately unless otherwise indicated

ITEM	MODEL NUMBER	WEIGHT
Brackets for pole Ø48 to Ø115 mm (Ø1.9 to Ø4.5 in) ***delivered as standard***	O8464	3.4 kg (7.5 lbs)
Brackets for pole Ø70 to Ø150 mm (Ø2.8-Ø5.9 in) ***optional***	O8465	3.9 kg (8.6 lbs)
Kit to add mechanical tilt (0° to 10°) to above brackets ***optional***	0900396/00	2.3 kg (5.1 lbs)

INSTALLATION

Please read all installation notes before installing this product.

⚠	Always attach the antenna by all mounting points.
	Do not install the antenna with the connectors facing upwards.

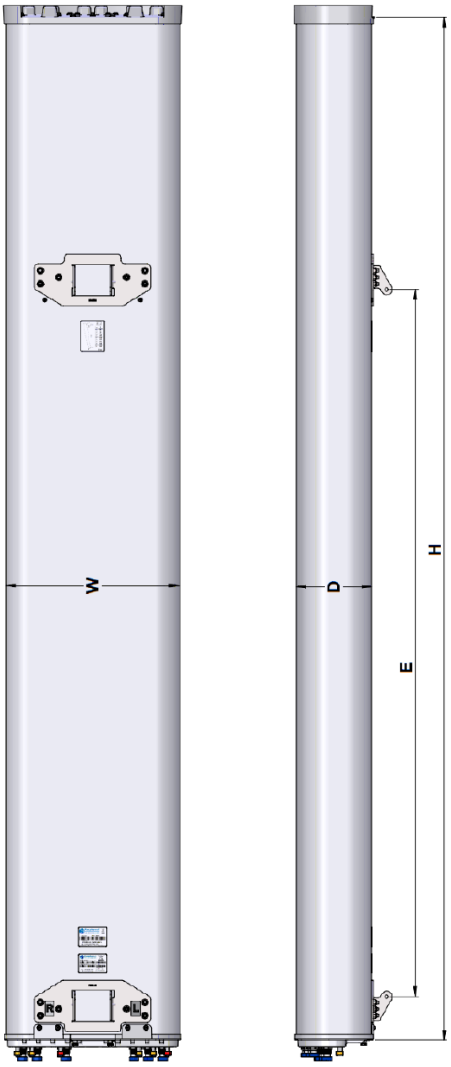

MAIN DIMENSIONS

Length	H	mm (in)	2697 (106.1)
Width	W	mm (in)	472 (18.6)
Depth	D	mm (in)	205 (8.0)
Distance between mounting points	E	mm (in)	1865 (73.5)